GREYSTONE

INSTRUCTION BOOK
OF 17" GRIDDLE

FOR RV USE OUTDOORS ONLY

INDEX

Safety notice 1
Precautions 2
The precaution of safty installation 3
Contents 3
Warning 3
Instruction for installation and assembly 4
Connecting the gas supply 4
Instruction for assembly 5
Instruction of operation 6
Danger 7
Clean the burner 7
Safety of food 7
Troubleshooting instruction 8
Specification of the griddle 9
Replacement parts 10

FOR YOUR SAFETY

⚠ DANGER

If you smell gas:

- Turn off gas to the appliance.
- Put out any open fire.
- If smell continues, walk away from the appliance and call your gas dealer or firemen at once.
- Don't leave this appliance unattended.
- Don't use this appliance within 25 ft to any flammable liquid.
- In the case of a fire, walk away from the appliance and call your firemen at once. Do not try to put out any oil or a grease fire with water.

Not following these instructions may cause a fire or explosion which may cause property damage, personal injured, or death..

⚠ WARNING

Please read all necessary information for the proper assembly and safe use of the appliance before installing this equipment. If you have any problems , call your service team or supplier. Dont try to fix the problems yourself, or it will cause injury or property damage.

Installing this appliance must conform with state or other codes, or, in the absence of such codes, with either the National Fuel Gas Code, ANSI Z223.1 / NFPA 54, or the Standard for Recreational Vehicles, ANSI A/NFPA 1192, and CSA Z240 RV Series, Recreational Vehicle Code, as applicable.

⚠ WARNING

CALIFORNIA PROPOSITION 65 WARNING:

The State of California is aware of this product can cause cancer and birth defects or other reproductive hard. (California law requires this warning be given to customers in the State of California.)

⚠ WARNING

Consumers must take responsibility to make sure the griddle is properly assembled,installed andmaintained. Not following the instructions could result in life injury and/or property damage.

PRECAUTIONS

1.Don't use Griddles indoors it is intended for outdoors only.
2.Replace the exact model If the regulator supplied with the appliance fails to work, or call the customer service number.
3.During any pressure test,the griddle and its individual shutof valve must be disconnected from the gas supply piping system at test pressures in excess of 1/2 psi (3.5 kPa).
4.The appliance must be separated from the gas supply piping system through closing its individual manual shut of valve during any pressure testing of the gas supply piping system at test pressures equal to or less than 1/2 psi (3.5 kPa).
5.Before using this appliance, visually inspect the gas hose from the tank connection to the orifice in case there is any wear , breaks, leaks, cracks, cuts or intrusions.If any of these discovered, replace hose prior to operation.
6.Under the condition of rain, snow , hail, sleet, or other forms of precipitation while cooking with oil or grease, it is necessary that you must cover the cooking vessel at once and turn off the appliance burners and gas supply.Don't try to move the griddle or cooking vessel.
7.Make sure the appliance must be on .a level, stable noncombustible surface in an area clear of combustible material during cooking. Don't place it on an asphalt surface (blacktop).

⚠ WARNING

- This griddle is used outdoors only, and can not be used in a building, garage, or any other enclosed area.
- It is not acceptable to be used on or under any flats or condominium balcony or deck
- Using alcohol, prescription or non-prescription drugs may damage the consumer's ability to properly assemble or safely operate the griddle.
- A type BC or ABC fire extinguisher is necessary to be ready during cooking
- When an oil or grease fire arise, don't attempt to extinguish with water. Must call the fire Department or use Type BC or ABC fire extinguisher.
- The appliance operation must be watched. Don't let children and pets near the appliance at all times.
- This appliance is not designed to be used as a heater and not suitable for frying turkeys.
- During and after use of the appliance, use insulated oven mitts or gloves for protection from hot surfaces or splatter from cooking liquids.
- Never put empty cooking vessel on the appliance while in operation.Be cautious when placing anything in cooking vessel while in operation.
- Never move the appliance during use. Must make sure the cooking vessel cool to 115°F (45°C) before moving or storing.

INSTALLATION SAFETY PRECAUTIONS

- The installation must conform with local codes, or in the absence of local codes, with either the National Fuel Gas Code, ANSI Z223.1/ NFPA 54, Natural Gas and Propane Installation Code,CSA B149.1 or Propane Storage and Handling Code, B149.2, or the Standard for Recreational Vehicles, ANSI A 119.2/NFPA 1192, and CSA Z240 RV Series, Recreational Vehicle Code, as applicable.
- Don't use inside RV's or on boats.
- It is safely certified to be used in the countries of United States and Canada. Never modify
- and use in any other countries. Modification will cause a safety hazard or damage.

Make sure you have read and understand all safety information, warnings and precautions, then proceed to the next page for assembly & installation instructions according to your particular model.

CONTENTS

Please check the contents and parts completely. This package has the following components:

GRIDDLE

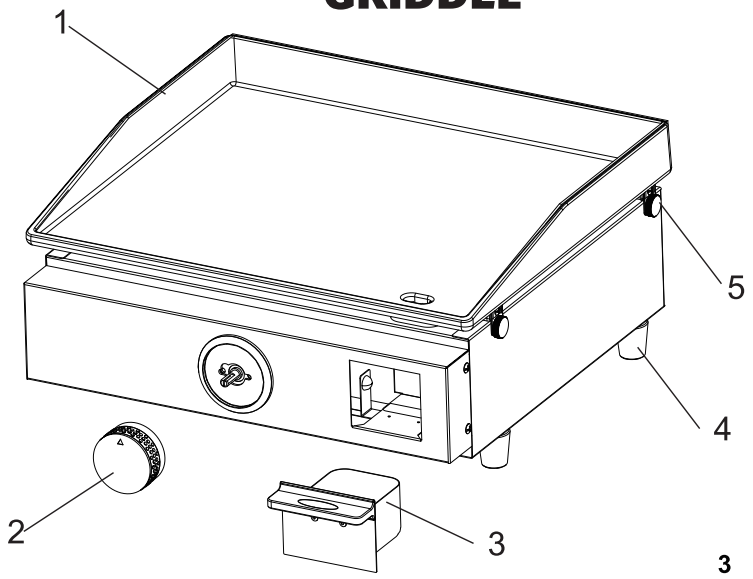

KEY	DESCRIPTION	QTY
1	GRIDDLE PLATE	1
2	CONTROL KNOB	1
3	GREASE CUP	1
4	FEET	4
5	SCREW	4

⚠ WARNING

NEVER use this appliance under extended awnings as it could cause a fire or personal injury.
It is a correct way to install it on the opposite side from the fuel distribution/dispensing system of the recreational vehicle.
To have a good storage (travel) position, ensure all low pressure propane gas system precautions are in place and all propane gas shut off valves are in the OFF position.

CONNECT THE GAS SUPPLY

⚠ CAUTION

Connect to the vehicle's propane system with a flexible hose connector complying with the high pressure requirements of the Standard for Pigtails and Flexible Hose Connectors for LP Gas, ANSI/UL 569, and a length no longer than that required to allow the griddle to be mounted in the "in use" position of its mounting system.
Install the hose in a manner that will not allow it to be in touch with the hot surface of the griddle while in operation or in the storage/travel mode.

⚠ CAUTION

BEFORE STARTING THE INSTALLATION

MUST fit the recommended minimum clearances to combustible constructions:

- 6” from sides
- 8” from back
- 8” from vertical

⚠ WARNING

It is dangerous to check leaks with an open fire. When not using,open the gas and apply soapy water to all joints to see if there are any bubbles

INSTALLATION

1. It is recommended drawer size/cutout size is 19.0” x 9.0” for the griddle plate must be placed in the storage position to be completely stored (must be cool to store)

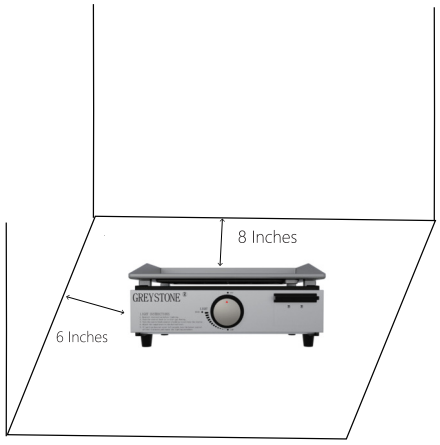

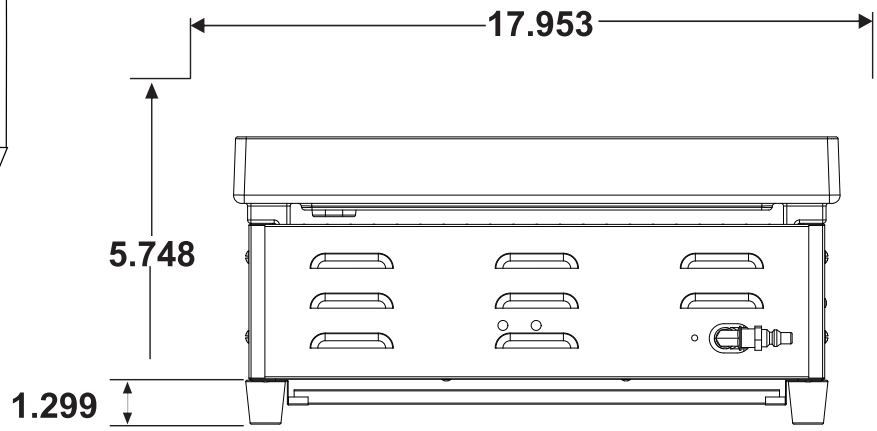

INSTRUCTION OF ASSEMBLY

Please read all the following direction before assembly.
1.Take packing material and all parts off the carton. Packing material and carton can be kept for storage if necessary.
2.Refer to the parts list on page 3. Make sure that all components are inside the package.
3.Align the Control Valve Knob with the Control Valve Shaft and press fully into place. Refer to illustration on Page 3.
4.Put grease tray into front control panel as shown in the illustration on page 3.
5.Take out the four rubber feet from the plastic bag included with the Outdoor Griddle. Separate the griddle top from the griddle body.

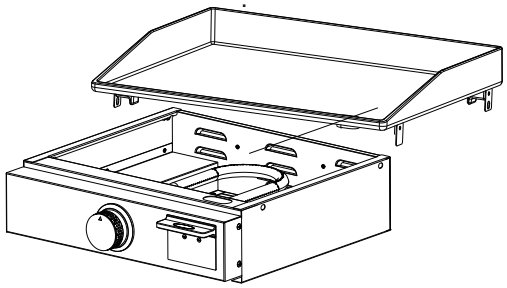

6.Install the oil pan,Push straight in from the bottom .

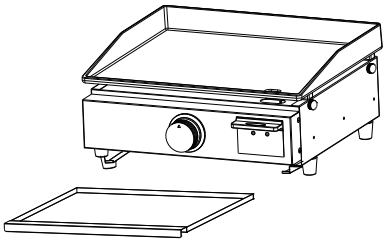

7. Make the griddle upside down on a soft surface. Put the four rubber feet on the bottom of the griddle.

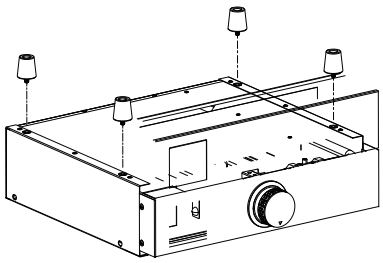

8. Turn it over so it stands on its feet and put the griddle plate in position on top of the griddle body.

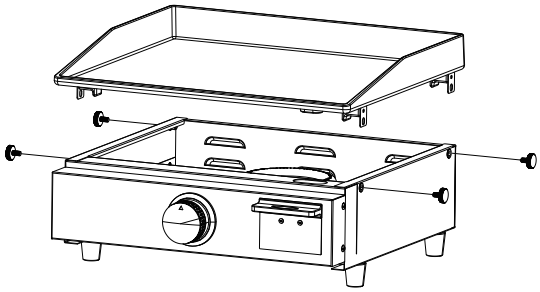

9. For the connection of griddle to propane, use the RV low pressure gas system hose to connect the quick-disconnect female to the male quick-disconnect fitting on the back of the griddle.

⚠ WARNING

Never check leaks with an open flame. Turn on the gas and apply soapy water to all joints to see if bubbles are formed.

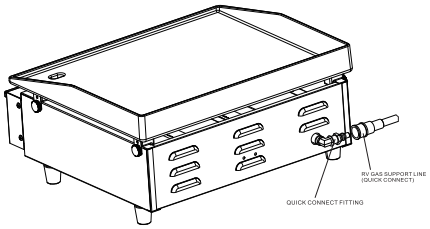

INSTRUCTION OF OPERATION

TO LIGHT GRIDDLE

1.Follow all instructions before lighting.
2.Push the control knob inside first and turn counter-clockwise

3.If fire does not appear in 5 seconds, shut the burner control off, wait for 5 minutes, and repeat the lighting action.

USE MATCH FOR LIGHTING

Never lean over the Griddle during lighting. Check and ensure no gas leaks occur.
1.Control knob must be in the “OFF” position.
2.Take off the griddle top.
3.Light a long match, then put the match on the right or left side of the burner.
4.Push the control knob in and turn counterclockwise to the HIGH position. See if the burner lights and keep it lit.

CHECK THE FLAME

Remove the griddle plate or the grease trap drawer before lighting in order to visually check the flame. Light burner and rotate knob from high to low and you will see smaller flame in the low position and bigger in the high position. You must check the flame before each use. If you only see low flame , refer to Burner has low flame regardless of knob position in the Troubleshooting section, change the griddle plate or grease drawer, before cooking.

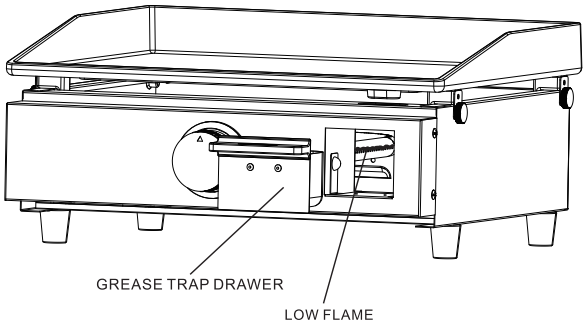

TO TURN OFF THE GRIDDLE

Turn the CONTROL KNOB to the OFF position.

SEASONING

Seasoning is baking oil into metal to create a stick resistant surface and protect against oxidation.
There is a thin layer of soy oil on the griddles to protect against rust during transportation. It can be washed off with warm soapy water then you begin your initial seasoning.

.

THE CHOICE OF OIL

The choice of oil is important when it comes to seasoning. Flax seed oil is the first choice for your initial seasoning as it creates a very durable bond. More choice of following oils can be used:

- Flax Seed Oil
- Extra Virgin Olive Oil
- Vegetable Oil
- Soy Oil

The purpose of your initial seasoning is to coat your griddle with oil and heat the oil above its smoke point to polymerize the oil and create a bond with the griddle top. You will form a black, stick resistant surface easy to clean.

TO SEASON THE GRIDDLE

1. First put small amount of chosen oil to the surface of the griddle top and Use a cloth or paper towel to spread it around (use tongs or metal spatula to hold the cloth or paper towel).
2. Make it Medium-high heat.
3. It is good to heat the oil until it reaches its “smoke-point” and let it continue to discolor.
4. Have the griddle cool a little. Repeat steps 1 through 3 a few times and black surface will be seen on your griddle.

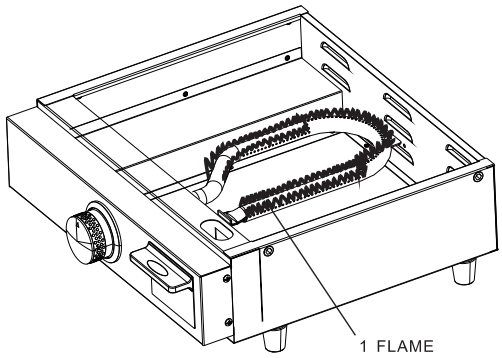

THE STRORAGE INSTRUCTION

⚠ DANGER

After using the griddle,don't put griddle in storage or travel mode at once. Must ensure it cool to touch before moving or storing.Not following the instruction may result in fire resulting in property damage, personal injury or death.

- For portable/tabletop griddles, use quick -disconnect fitting (following applicable safety steps) to disconnect from the recreational vehicles low pressure LP gas supply system .
- Turn the griddle off before storing indoors. Disconnect it from the low pressure gas system, and the unit itself is at room temperature.

TO CLEAN BURNER

Read the following instructions to clean the burner.
1.Shut the gas down at control knob.
2.All components must be cooled down .
3.Get griddle plate off from assembly .
4.Use wire to brush the entire outer surface of the burner to clean food residue and dirt.
5.A stiff wire such as an open paper clip can be used to clean any blocked ports
6 Wear eye protection and use an air hose to force air into the burner tube and out the burner ports. Ensure each port to make sure air is coming out each respective nozzle.

SAFETY OF FOOD

The safety of food is a key part for enjoying the outdoor cooking experience. Follow the four steps in order to keep food safe from harmful bacteria:
1.Clean: Use hot soapy water to wash hands, utensils, and surfaces before and after handling raw meat and poultry
2.Separate:To avoid cross contamination , separate raw meats and poultry from ready- to eat food. Use a clean platter and utensils when removing cooked foods.
3.Cook: Make sure meat and poultry cooked thoroughly to kill bacteria. You can use a thermometer to ensure proper internal food temperatures.
4. Guangzhou Hengfu Hardware Technology co.,Ltd Distict de Huadu,ville de Huashan,route du village de Rulin road 101, Guangzhou,china

TROUBLESHOOTING DIRECTION

PROBLEM	POSSIBLE CAUSE	SOLUTION
Using the piezoelectric ignition system can't light the burner	No Propane Supply or empty supply	Inspect shutoff valves Fill Propane supply
	Defective regulator	Check regulator Call Customer Service
	Electrode not in correct position or is Damaged/Faulty	Ensure electrode is positioned as shown in "Ignition Electrode Position". Call Customer Service
	Obstructions in gas injection or gas hose	Have injection and gas hose cleaned
	Obstructions in the burner	Clean the burner following steps outlined in "Cleaning The Burner "
A match can't light burner	No Propane Supply/empty supply	Inspect shutoff valves Fill Propane supply
	Defective regulator	Have regulator checked. Call Customer Service
	Obstructions in gas injection or gas hose	Have injection and gas hose cleaned
	Obstructions in the burner	Refer to "Cleaning The Burner " to clean the burner
Burner has only low flame	Low inlet gas supply pressure	Check gas pressure on both inlet side and outlet side of appliance regulator. Call Customer Service
	Low gas supply	Fill Propane Supply
	Defective control valve	Call Customer Service
Burner has a hissing or roaring noise	Obstructions in the burner	Refer to "Cleaning The Burner " to clean the burner
	Obstructions in gas injection or gas hose	Have injection and gas hose cleaned
	Burner could be damaged	Call Customer Service

SPECiFiCATION OF THE GRIDDLE

Intertek
5017346

Conforms to ANSI STD Z21.89-2017Certified to CSA STD 1.18-2017 Outdoor Cooking Specialty Gas Appliance

This appliance is not intended for commercial use

PORTABLE / TABLETOP	
BURNER INPUT RATE	12000 BTU/h
INLET GAS PRESSURE	MAX: 13 inches
UNIT WEIGHT	30 lbs.

Illustrations below show the Griddle Plate in the stored position.

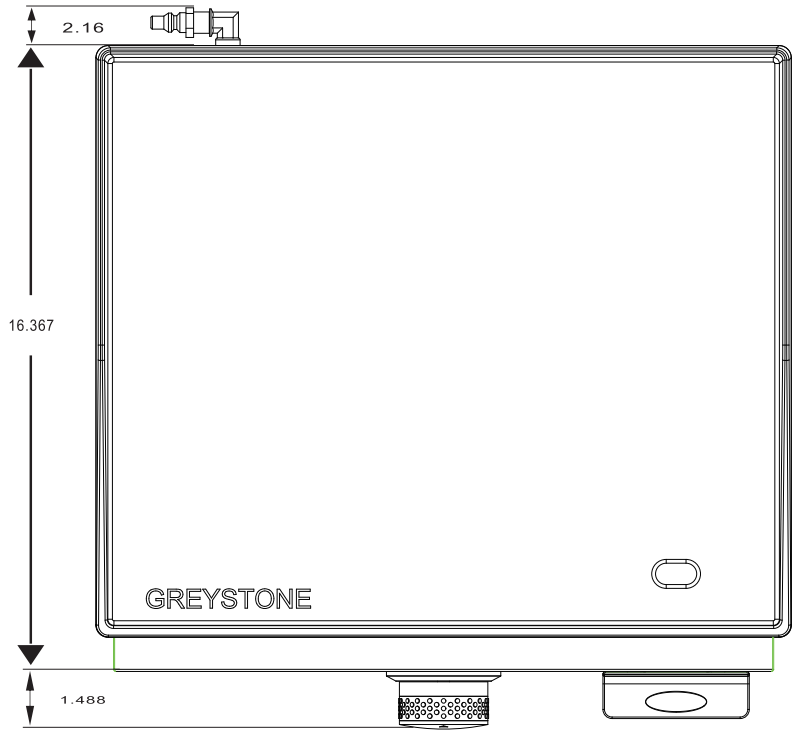

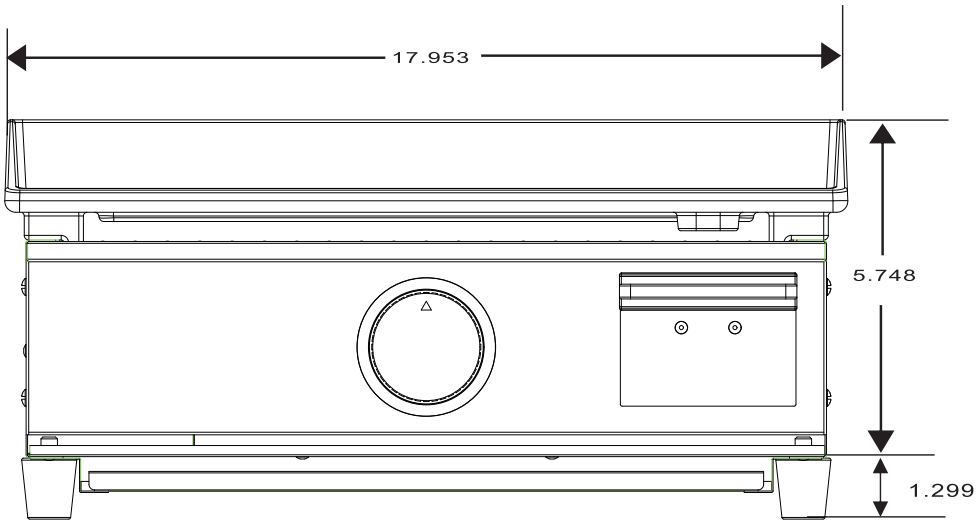

REPLACEMENT PARTS

KEY	DESCRIPTION	QTY
1	GRIDDLE PLATE	1
2	GREASE CUP	1
3	CONTROL KNOB	1
4	BURNER	1
5	FEET	4
6	QUICK CONNECT FITTING	1
7	Hand-screw	4

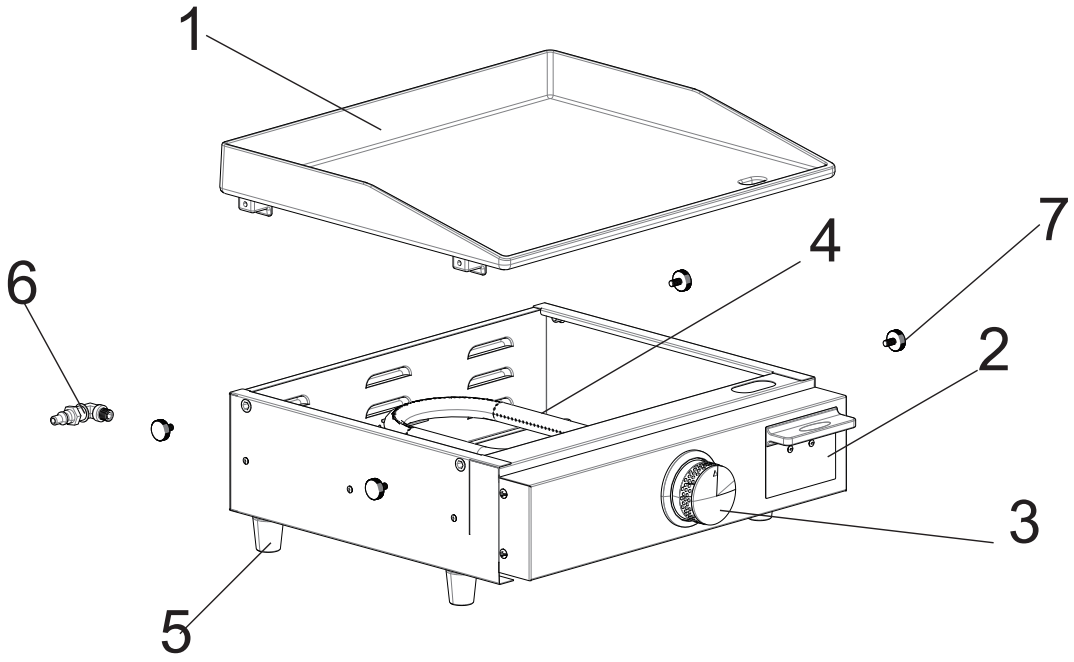

GREYSTONE